SAFEbuilt inc.

Building Guides for Homeowners

# Accessory Structures

## What you need to apply for a building permit:

| | | |
|---|---|---|
| ☐ | Site Plan | Page 2 |
| ☐ | Construction Details | Page 3 |
| ☐ | Floor Plan | Page 4 |
| ☐ | Permit Application | |

## *Did You Know?*

- Check with building department for size of structures exempt from permits.
- As "owner-builder" you are the responsible party of record on such a permit. If your work is being performed by a contractor, you may protect yourself from possible liability if the contractor applies for the proper permit in his or her name.
- If you plan to do your own work, with the exception of various trades that you plan to subcontract, the subcontractors must be listed on the application.
- If you plan to do your own work, including all of the trade work, then you may apply for the permit.
- Frequent practices of unlicensed contractors is to secure "owner-builder" building and trades permits, erroneously implying that the property owner is providing his or her own labor and material personally.
- It would benefit you to hire a licensed contractor to perform the trade work.
- Permits are valid for work to begin within six months.
- Permits expire if no work is performed for longer than 180 days.

## *Why Do I need a Permit?*

There are many important reasons to obtain building permits and to have inspections performed for your construction project.

**Protects property values**

Your home is typically your largest investment. If your construction project does not comply with the building codes, your investment could lose value. If others in your neighborhood make unsafe or substandard changes to their homes, it could lower the resale values for the entire community.

**Saves Money**

Homeowners insurance policies may not pay for damages caused by work done without permits and inspections.

**Makes Selling Property Easier**

Listing associations require owners to disclose any home improvements or repairs and whether permits were obtained. Many financial institutions will not finance a purchase without proof of a final inspection. If you decide to sell a home or building that has had modifications without a permit, you may be required to tear down the addition, leave it unoccupied or do costly repairs.

**Improves safety**

Your permit allows the building department to inspect for potential hazards and unsafe construction. By ensuring your project meets the minimum building code standards of safety, the building department can reduce the risk of fire, structural collapse and other issues that might result in costly repairs, injuries and even death. Inspections complement the contractor's experience and act as a system of checks and balances that can result in a safer project.

**It's the Law**

Permits are required by Ordinance. Work without a permit may be subject to removal or other costly remedies.

## Tips on hiring contractors

- Hire only licensed contractors.
- Get at least 3 bids.
- Get 3 references, and ask to see a project.
- Get it in writing, but before you sign the contract, make sure you completely understand.
- Do not make final payment until you have received a Certificate of Occupancy (CO) and until you are satisfied.
- **Have the contractor apply for the required permits.**

# What is a Site Plan?

A site plan is a detailed drawing of your property, also known as a survey of your land. These are usually drawn by a land surveyor. The site plan will show the dimensions of your project and its relationship to existing setbacks, easements, utilities, other structures on the property, and distance to your property lines. If your project will require moving any utilities (gas, water, sewer/septic, electric, etc.), show where those meters will be relocated.

### What is REQUIRED for a Permit?

☐ Provide copies of the SITE PLAN

**Notes:**

1. Structures shall not be permitted to be built over setback lines, easements, or property lines.
2. A survey from a registered land surveyor will be required if your project is located in a protected area.
3. An as-built survey is required if the structure is proposed within 12 inches of a required minimum setback.
4. If your property is on a slope, you may be required to install silt fence to keep the dirt on your property.
5. If you are on a septic tank, you will be required to have approval from the county health department prior to issuance of a permit.
6. If you do not know the location of your utilities, contact the Utility Notification Center. Remember to ask them about the cost of this service.

***Sample site plan***
***Not to Scale***

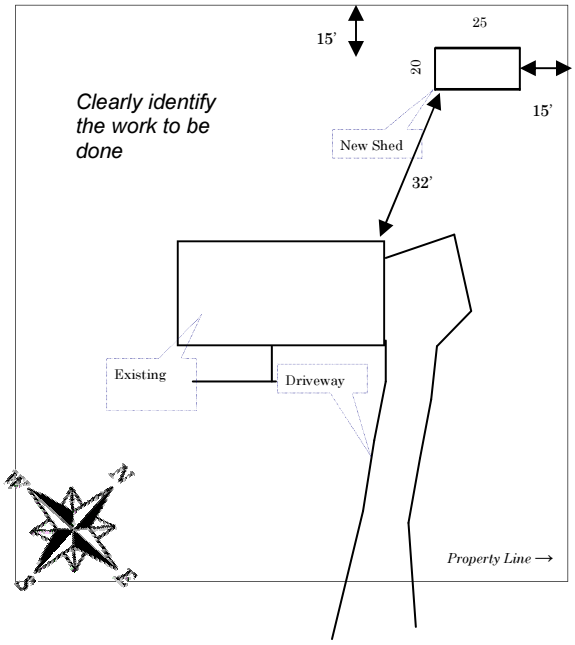


# Inspection Information

### What will the building inspector look at?

***A typical accessory structure project will require the following inspections:***

1. *Footings* Footing inspections shall be made after trenches are excavated, forms erected, and PRIOR to placing of concrete.
2. *Slab* Inspection shall be made PRIOR to placing concrete.
3. *Frame/Rough Inspection:* (Utility inspections if installed) This inspection is made after the roof, all framing, bracing and fasteners are in place.
4. *Final* Inspection made AFTER the structure is completed.

**The permit technician will let you know your projects' required inspections when the permit is issued.**

The purpose of this guide is to assist you in the permitting process. This handout is intended to cover information for a basic plan submittal and typical project under the building codes. It is not intended to cover all circumstances. Depending on the scope and complexity of your project, additional information may be required. Discuss your project with city staff to determine if it is subject to additional requirements.

### How do I schedule a required Inspection?

Please call **the inspection line listed on your permit card** and leave all information requested in the message.

# Construction Details

Construction details and specifications help the building department find problems before they occur in the field.

This example shows the types of detail our office will be looking for in your plan submittal.

**In addition to construction details such as these, you will need to submit details on:**

1. Foundation detail
2. Floor Plan

***REMINDER:***

Permits are only issued after plan review. The time required to conduct this review will depend on the completeness of the information we receive in the plans.

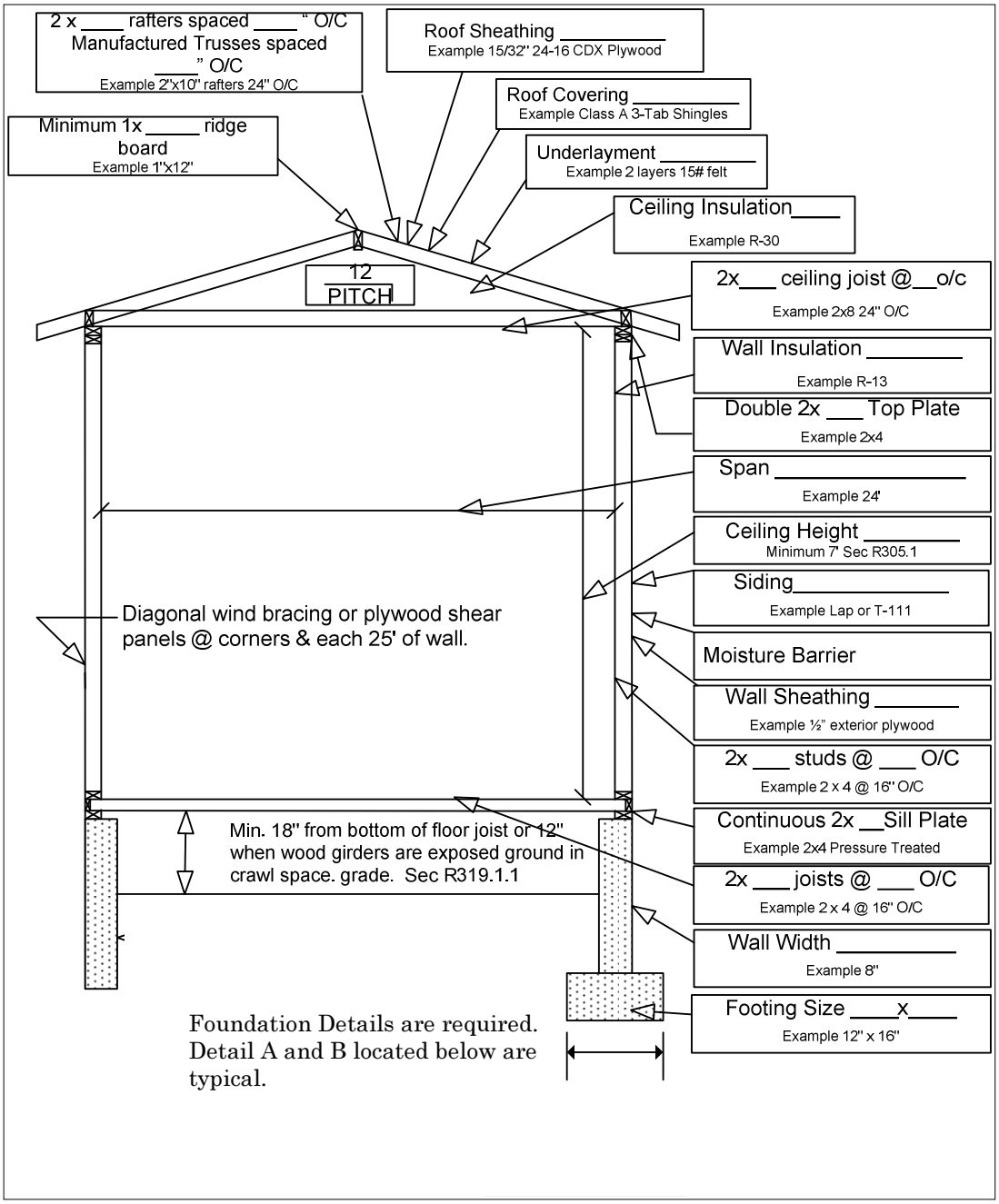


## Foundation Detail A

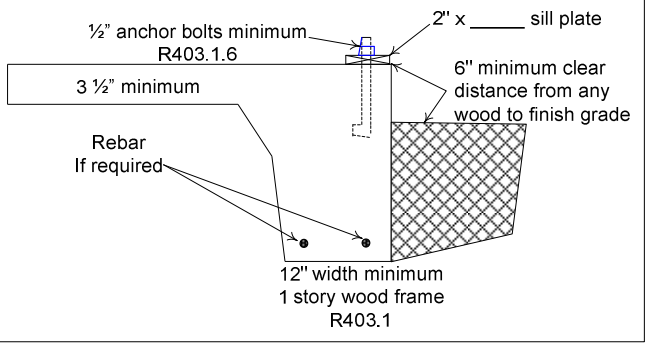


## Foundation Detail B

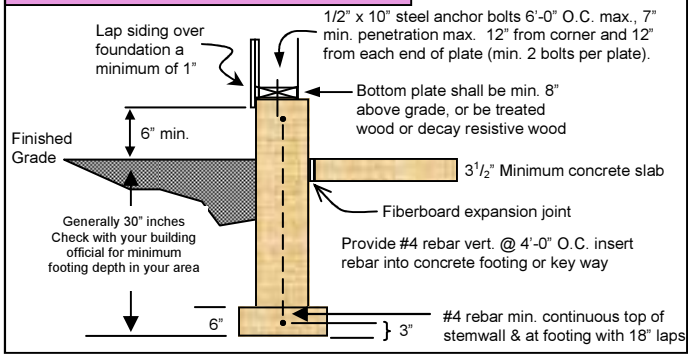

# Floor Plan

The floor plan is used to determine the complexity of the work and to validate the site plan. Floor plans must show any dimensions of the structure and openings.

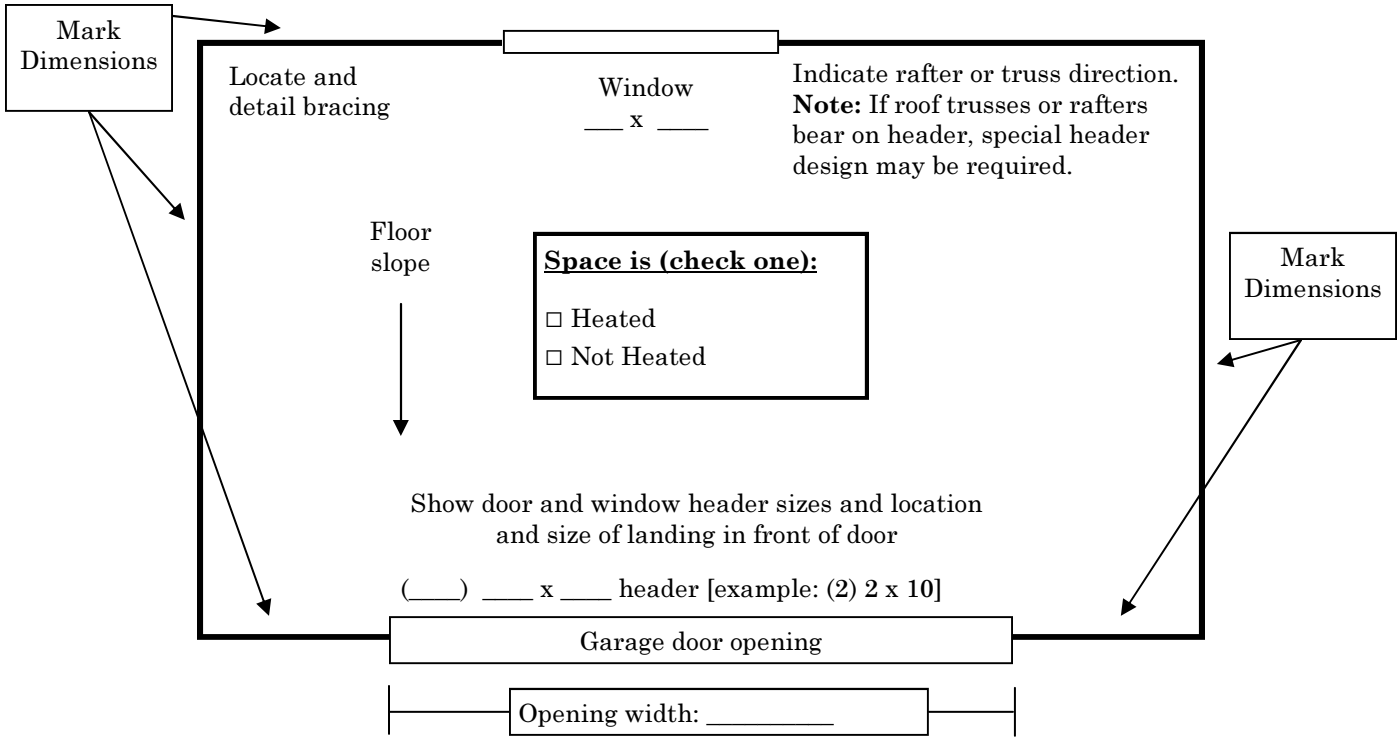

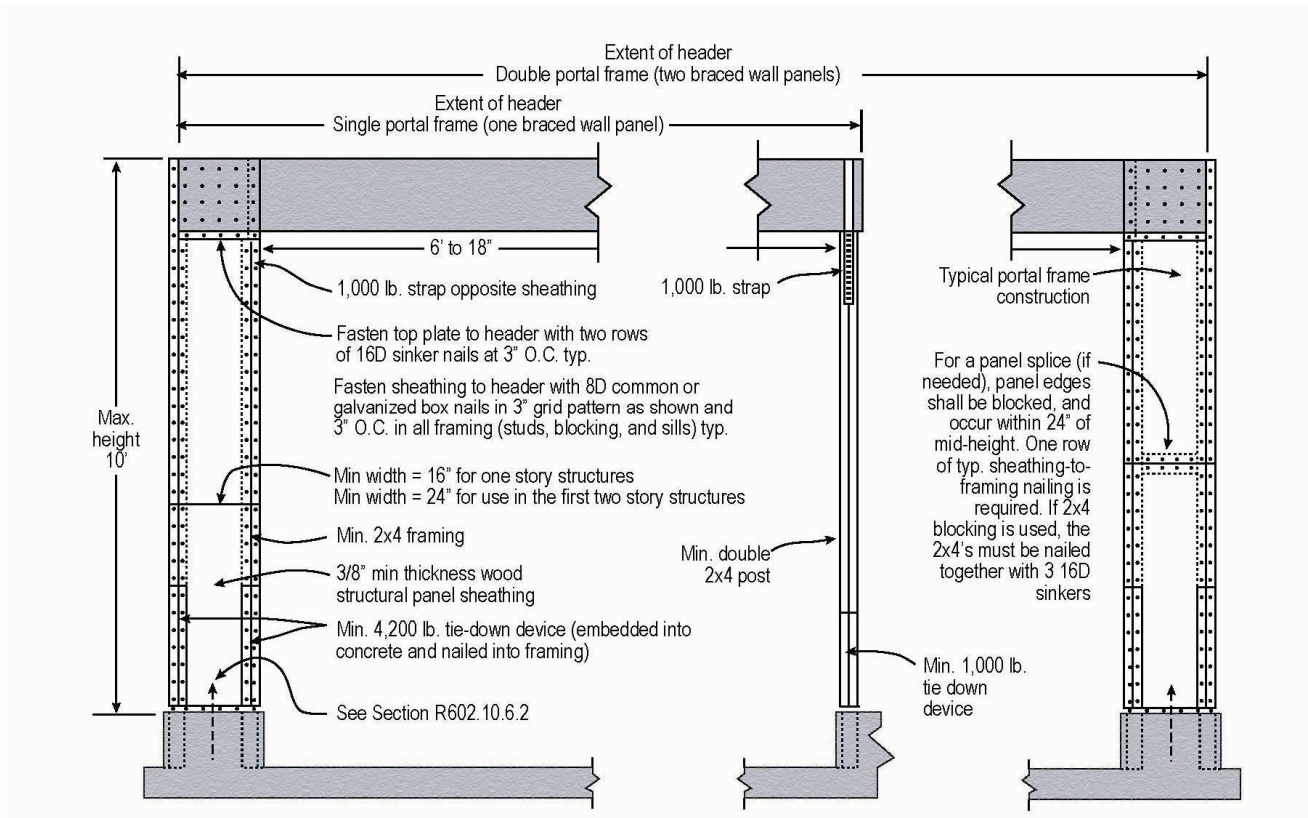
# Braced Wall Panel Detail